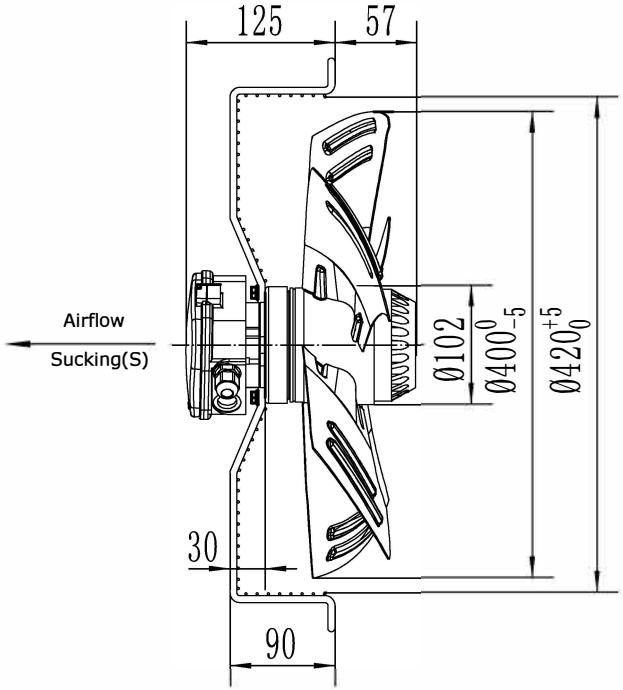

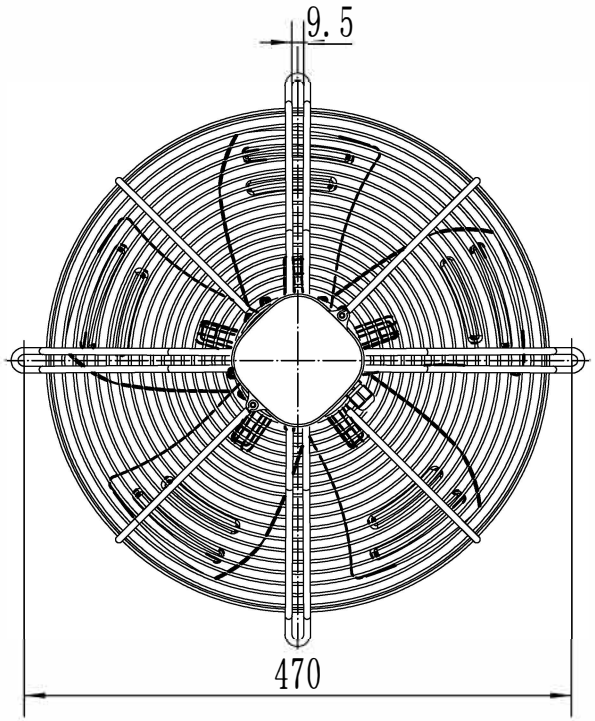

UNIT	Axial fan motor
MOTOR	Three phases motor
MOTOR TYPE	RW4-400 400V IMEVÄ
VOLTAGE (V)	400
FREQUENCY (Hz)	50
INPUT POWER (W)	180
CURRENT (A)	0.47
SPEED (r/min)	1380
AIR FLOW 20Pa (m³/h)	3675
NOISE (dBA)	67
CAPACITOR (μF/450V)	-
ROTATION	CW ,looking into the end-shield
INSULATION CLASS	B
MOTOR PROTECTION	Thermocontact 135±5℃
TEMPERATURE RISE	75K max
PROTECTION CLASS	IP54
OPERATING TYPE	S1
AMBIENT TEMPERATURE	-30°C +60°C
BEARINGS	Ball bearings
MOUNTING TYPE	Horizontal or Vertical
ELECTRICAL CONNECTION	Lead wire Silikon 4G 0.50mm²+2G 0.30mm², Length 100mm in terminal box connected
APPROVALS	CE
NET WEIGHT/GROSS WEIGHT	6.0/7.0kg
PACKING	43.5*43.5*20cm

LABEL :

REFPOWER
Axial Fan Motor
RW4-400 400V IMEVÄ
400V 50Hz 0.47A 110/180W 1380r/min
CL.B XX/XX
CE

WIRING DIAGRAM:

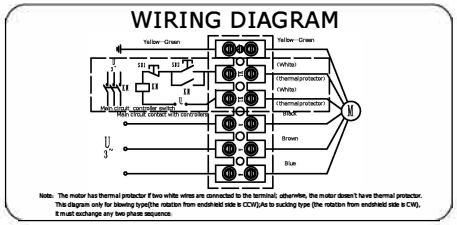

FLOW RATE CURVE:

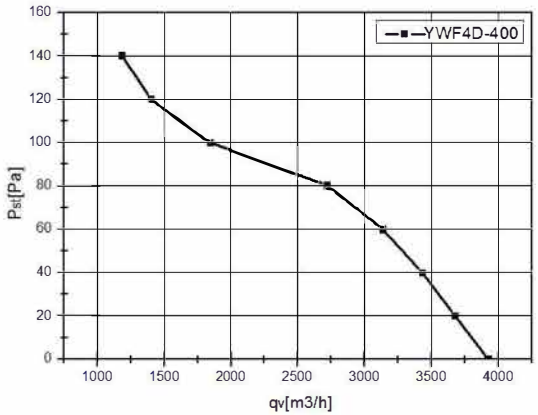

							SIGN	DATE	TITLE RW4-400 400V IMEVÄ
						DRN. BY			
						CHD. BY			PROJECTION
						ENG. BY			A4
REV.	DESCRIPTION	APPROVED	DATE			APP. BY			SCALE / SHEET: of